Volume and Surface Area

Cube

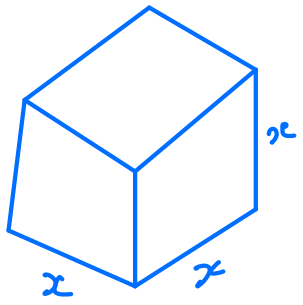

Length, width, Height all the same

$$\text{Volume} = x \times x \times x = x^3$$

$$\text{Surface Area} \quad 6 \times x^2 = 6x^2$$

Ex Cube with edge 8 cm

$$\text{Volume} = 8^3 = 512 \text{ cm}^3$$

$$\text{Surface Area} = 6 \times 8^2 = 384 \text{ cm}^2$$

Cuboid

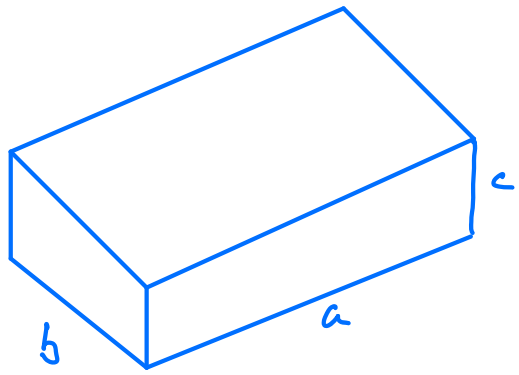

Length a
Width b
Height c

$$\text{Volume} = a \times b \times c$$
$$= abc$$

Surface Area = top + bottom + front + back + left side + right side

$$= ab + ab + ac + ac + bc + bc$$
$$= 2(ab + ac + bc)$$

Example

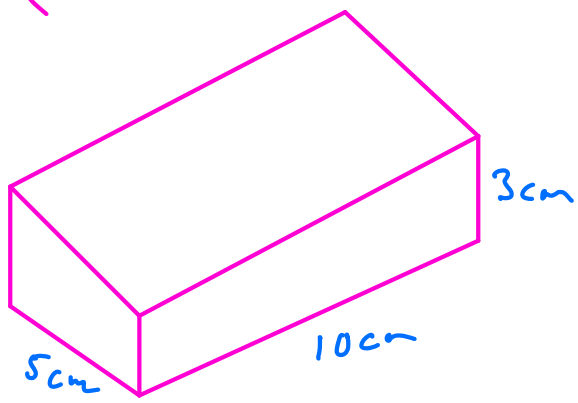

Vol $= 10 \times 5 \times 3$

$= 150 \text{ cm}^3$

Surface area

$= 10\times5 + 10\times5 + 10\times3 + 10\times3 + 5\times3 + 5\times3$

$= 50 + 50 + 30 + 30 + 15 + 15$

$= 190 \text{ cm}^2$

Prisms - have uniform cross-section

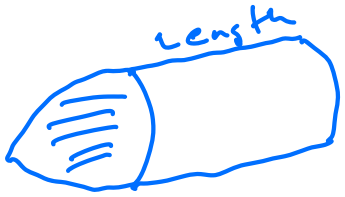

Cross-section area

Vol = cross-section area × length

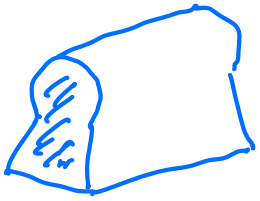

Example

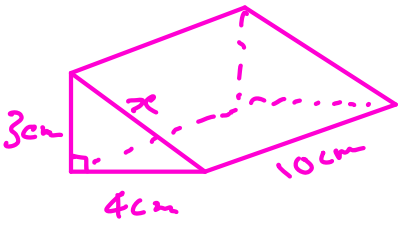

Find Volume

cross-section area $= \frac{1}{2} \times 4 \times 3 = 6 \text{ cm}^2$

length $= 10$ cm

Volume $= 6 \times 10 = 60 \text{ cm}^3$

Find surface area

Pythagoras $x^2 = 3^2 + 4^2 = 9 + 16 = 25$

$x = \sqrt{25} = 5$ cm

2 triangles + 3 rectangles

$6\text{cm}^2 + 6\text{cm}^2 + 10\times4 + 10\times3 \times 10\times5 = 132 \text{ cm}^2$

Page 70

EXERCISE 4D

1 For each prism shown

i sketch the cross-section **ii** calculate the area of the cross-section

iii calculate the volume.

a

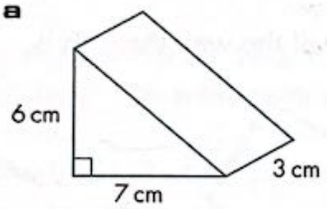

b

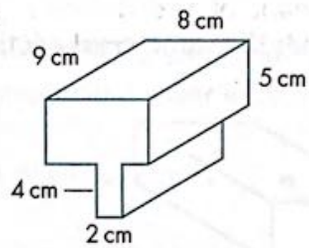

c

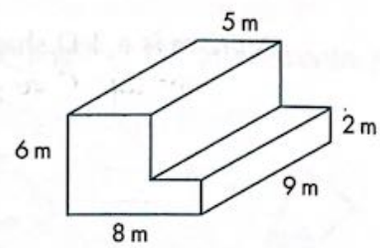

2 Calculate the volume of each of these prisms.

a

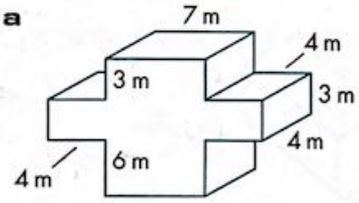

b

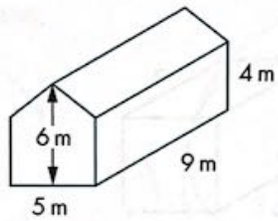

c

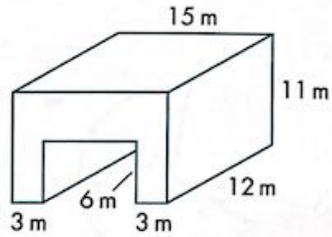

3 The uniform cross-section of a swimming pool is a trapezium with parallel sides, 1 m and 2.5 m, with a perpendicular distance of 30 m between them. The width of the pool is 10 m. How much water is in the pool when it is full? Give your answer in litres.

4 A lean-to is a prism. Calculate the volume of air inside the lean-to with the dimensions shown in the diagram. Give your answer in litres.

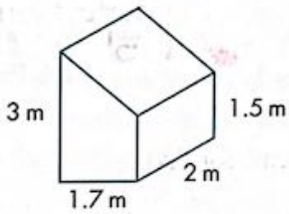

5 Each of these prisms has a regular cross-section in the shape of a right-angled triangle.

a Find the volume of each prism. **b** Find the total surface area of each prism.

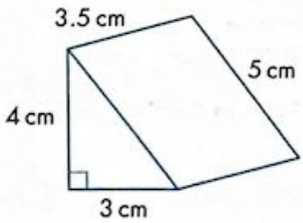

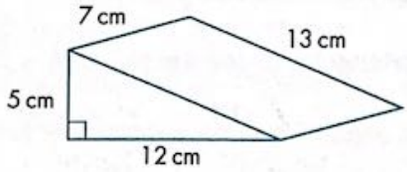

Find Volume

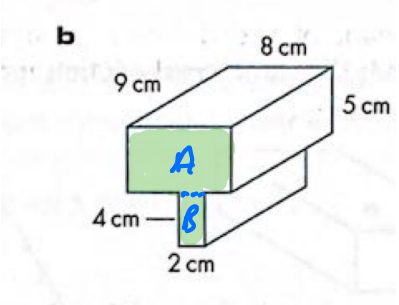

Length = 9 cm

Cross-section = A + B

= 8 × 5 + 4 × 2

= 40 + 8 = 48 cm²

Volume = 48 × 9 = 432 cm³

Classwork

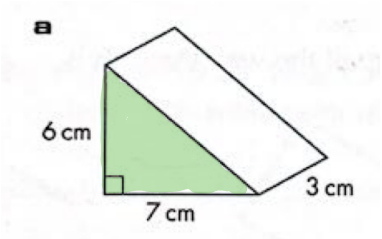

Length 3 cm

Cross-section $\frac{1}{2} \times 6 \times 7 = 21$ cm²

Volume = 21 × 3 = 63 cm³

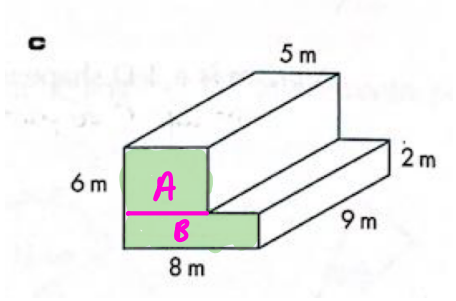

Length 9 m

A = 4 × 5 = 20 m²

B = 8 × 2 = 16 m² +

Cross-section 36 m²

Volume = 36 × 9 = 324 m³

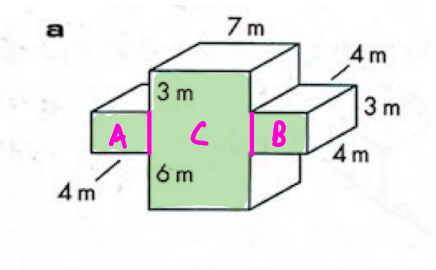

Length 4 m

A = 4 × 3 = 12 m²

B = 4 × 3 = 12 m²

C = 12 × 7 = 84 m² +

Cross-section $108\ m^2$

Volume $= 108 \times 4 = 432\ m^3$

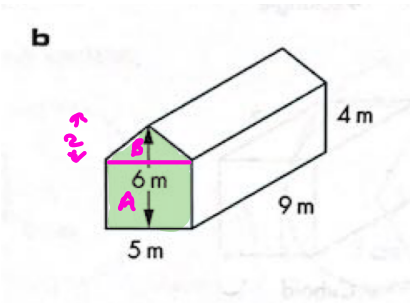

Length $= 9m$

$A = 5 \times 4 = 20\ m^2$

$B = \frac{1}{2} \times 5 \times 2 = 5\ m^2$

Cross-section $= 25\ m^2$

Volume $= 25 \times 9 = 225\ m^3$

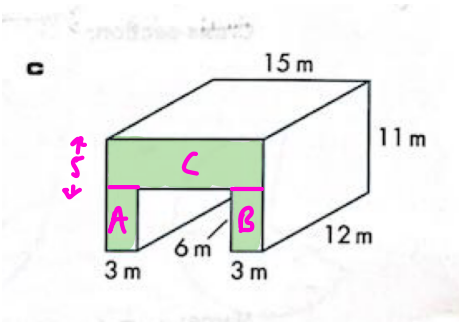

Length $= 12m$

$A = 6 \times 3 = 18\ m^2$

$B = 6 \times 3 = 18\ m^2$

$C = 15 \times 5 = 75\ m^2$ +

Cross-section $= 111\ m^2$

Volume $= 111 \times 12 = 1332\ m^3$
