Volume and Surface Area

Cube

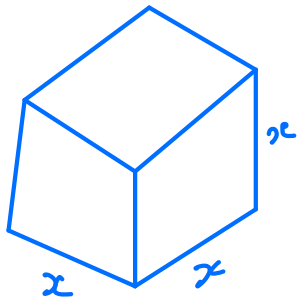

$$\text{Volume} = x \times x \times x$$
$$= x^3$$

$$\text{Surface area} = 6 \times x^2$$
$$= 6x^2$$

Example

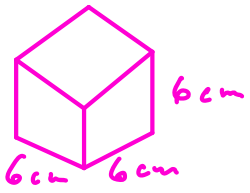

$$\text{Volume} = 6^3 = 216\ cm^3$$

$$\text{Surface Area} = 6 \times 6^2 = 216\ cm^2$$

Cuboid

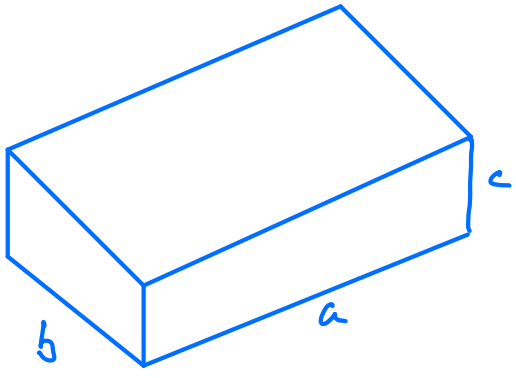

$$\text{Volume} = a \times b \times c$$
$$= abc$$

Length × Width × Height

Surface Area

Front Back	Left side Right side	Top Bottom

$$2ac + 2bc + 2ab$$

or $$2(ac + bc + ab)$$

Example

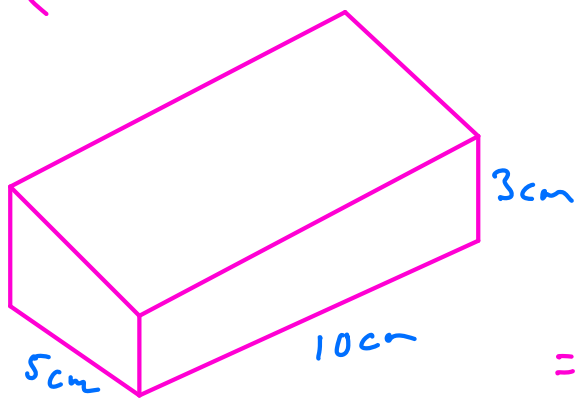

Volume $= 10 \times 5 \times 3$

$= 150\ cm^3$

Surface Area

$= 2(10 \times 3 + 10 \times 5 + 5 \times 3)$

$= 2(30 + 50 + 15)$

$= 190\ cm^2$

Prisms - have uniform cross-section

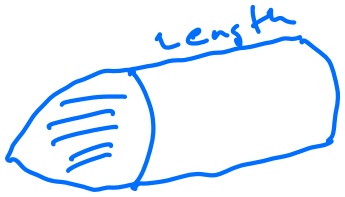

Cross-section area

Vol = cross-section area × length

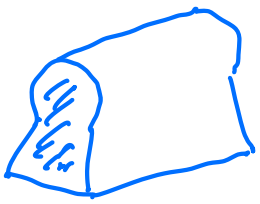

Example

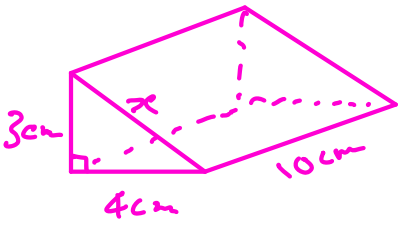

Area of cross-section $= \frac{1}{2} \times 4 \times 3$

$= 6\ cm^2$

Volume = Area of cross-section × Length

$= 6 \times 10$

$= 60\ cm^3$

$x^2 = 3^2 + 4^2 = 25$

$x = \sqrt{25} = 5\ cm$ (Pythagoras)

S.A = 2 Triangles + 3 Rectangles

$2(\frac{1}{2} \times 4 \times 3) + 10 \times 4 + 10 \times 3 + 10 \times 5 = 132\ cm^2$

Page 70

EXERCISE 4D

1 For each prism shown

i sketch the cross-section **ii** calculate the area of the cross-section

iii calculate the volume.

a

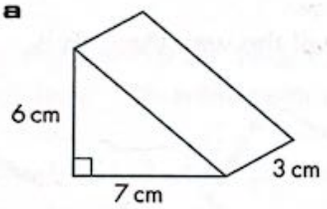

b

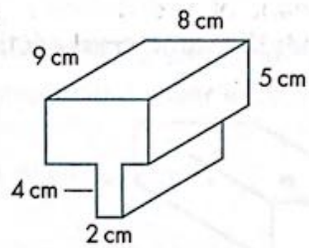

c

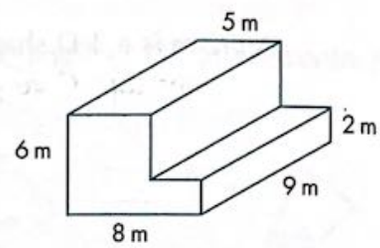

2 Calculate the volume of each of these prisms.

a

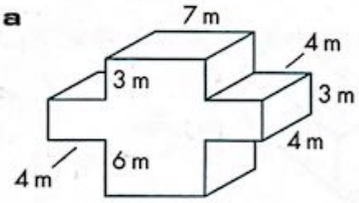

b

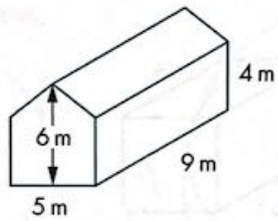

c

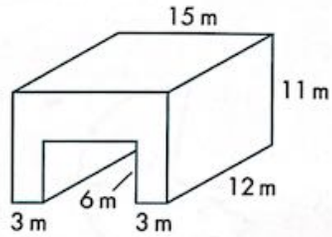

3 The uniform cross-section of a swimming pool is a trapezium with parallel sides, 1 m and 2.5 m, with a perpendicular distance of 30 m between them. The width of the pool is 10 m. How much water is in the pool when it is full? Give your answer in litres.

4 A lean-to is a prism. Calculate the volume of air inside the lean-to with the dimensions shown in the diagram. Give your answer in litres.

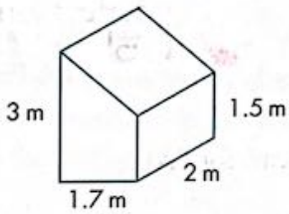

5 Each of these prisms has a regular cross-section in the shape of a right-angled triangle.

a Find the volume of each prism. **b** Find the total surface area of each prism.

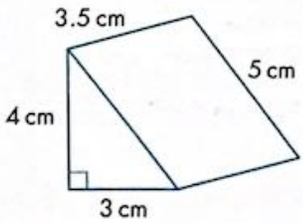

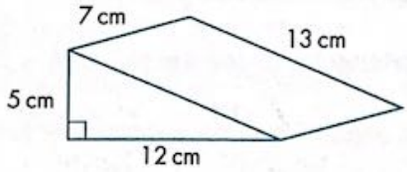

Find Volume

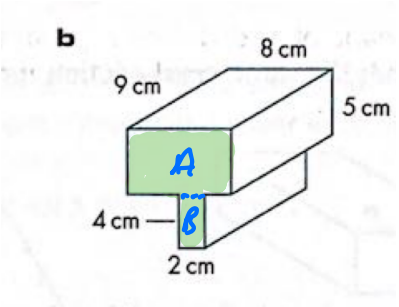

Cross-Section Area

$A = 8 \times 5 = 40$

$B = 4 \times 2 = 8$ +

Total Area $48\ cm^2$

Volume = cross-section area × length

$= 48 \times 9 = 432\ cm^3$

Classwork

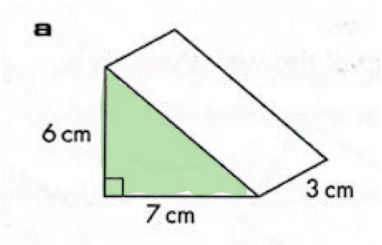

Length 3cm

Cross-section $\frac{1}{2} \times 6 \times 7 = 21\ cm^2$

Volume $= 21 \times 3 = 63\ cm^3$

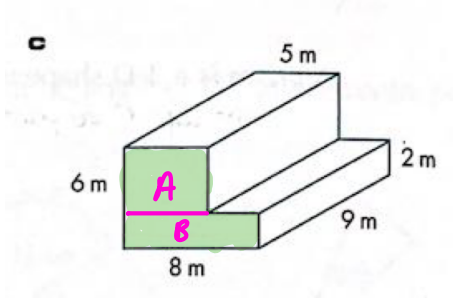

Length 9 m

$A = 4 \times 5 = 20\ m^2$

$B = 8 \times 2 = 16\ m^2$ +

Cross-section $36\ ^2$

Volume $= 36 \times 9 = 324\ m^3$

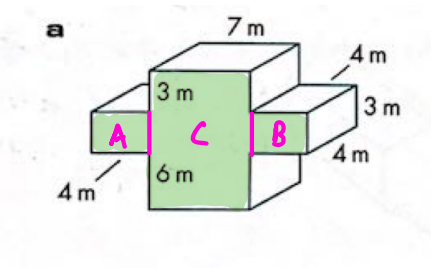

Length 4m

$A = 4 \times 3 = 12\ m^2$

$B = 4 \times 3 = 12\ m^2$

$C = 12 \times 7 = 84\ m^2$ +

Cross-section $108\ m^2$

Volume $= 108 \times 4 = 432\ m^3$

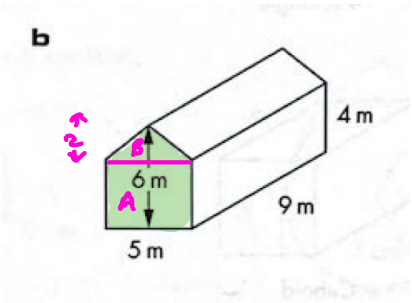

Length $= 9\ m$

$A = 5 \times 4 = 20\ m^2$

$B = \frac{1}{2} \times 5 \times 2 = 5\ m^2$

Cross-section $= 25\ m^2$

Volume $= 25 \times 9 = 225\ m^3$

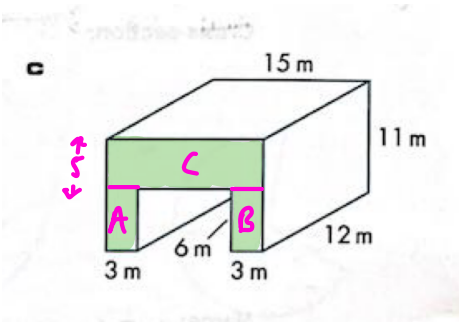

Length $= 12\ m$

$A = 6 \times 3 = 18\ m^2$

$B = 6 \times 3 = 18\ m^2$

$C = 15 \times 5 = 75\ m^2$ +

Cross-section $= 111\ m^2$

Volume $= 111 \times 12 = 1332\ m^3$

Homework in Small Books

Q3, Q4, Q5

from exercise above

Draw diagrams for <u>each</u> question.