Volume and Surface Area 2

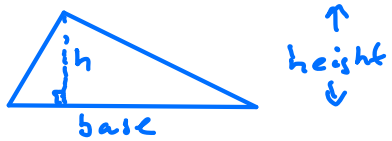

Area of Triangle

$= \frac{1}{2}$ base $\times$ height

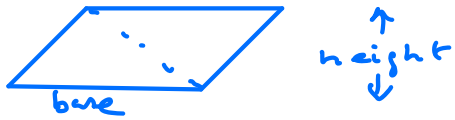

Area of Parallelogram

= base $\times$ height

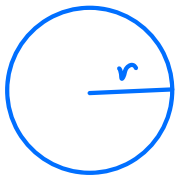

Area of circle

$= \pi r^2$

Circumference

$= 2\pi r$

Cylinder

$\text{Vol} = \pi r^2 h$

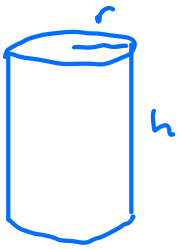

$$\text{Surface Area} = \underbrace{2\pi r h}_{\text{curved surface}} + \underbrace{2\pi r^2}_{\text{2 ends}}$$

Area of a trapezium

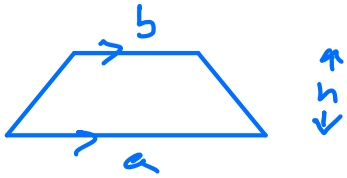

$$\text{Area} = \frac{1}{2}(a+b)h$$

Half the sum of the parallel sides multiplied by the height

Examples

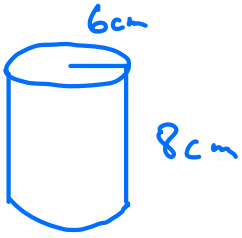

$$\begin{aligned} \text{Vol} &= \pi r^2 h \\ &= \pi \times 6^2 \times 8 \\ &= 288\pi \text{ cm}^3 \\ &= 905 \text{ cm}^3 \end{aligned}$$

to 3 s.f

Surface Area = Two circles + Rectangle (curved surface)

$= 2\pi r^2 + 2\pi r h$

$= 2\pi \times 6^2 + 2\pi \times 6 \times 8$

$= 168\pi \text{ cm}^2$

$= 528 \text{ cm}^2$ to 3 s.f.

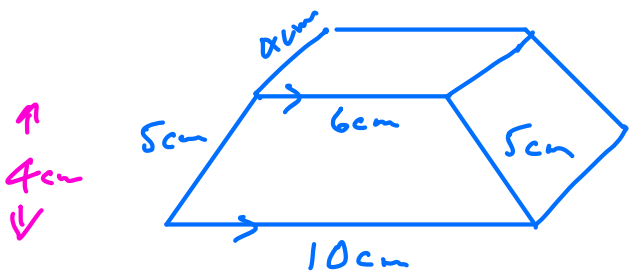

Find volume and surface area of prism

Area of trapezium $= \frac{1}{2}(a+b)h$

$= \frac{1}{2}(10+6) \times 4$

$= 32 \text{ cm}^2$

Vol = Area of cross-section × Length

$= 32 \times 4$

$= 128 \text{ cm}^3$

Surface Area = 2 Trapeziums + 4 rectangles

$= 32 + 32 + 10 \times 4 + 5 \times 4 + 6 \times 4 + 5 \times 4$

$= 32 + 32 + 40 + 20 + 24 + 20$

$= 168 \text{ cm}^2$

---

1 Calculate the volume and total surface area of each (solid) prism.

a

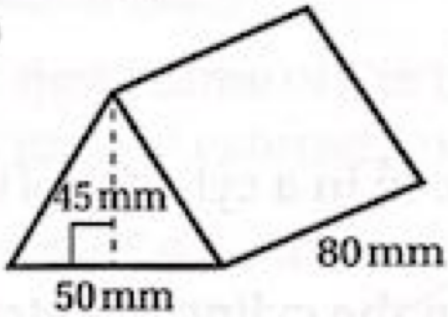

b

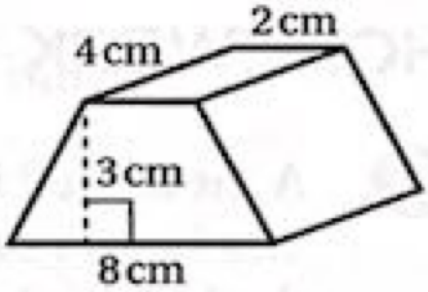

c

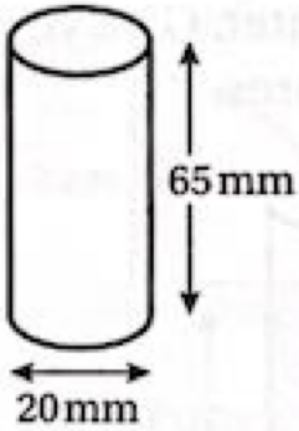

d

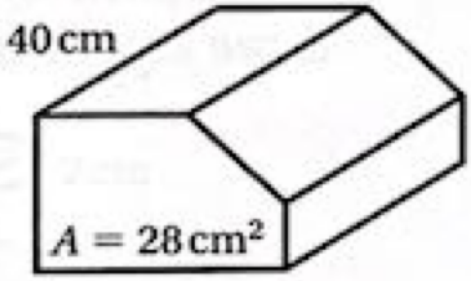

e

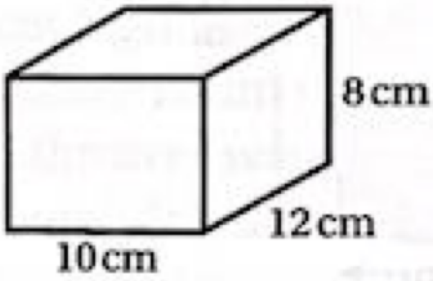

f

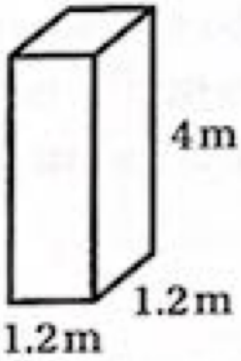

g

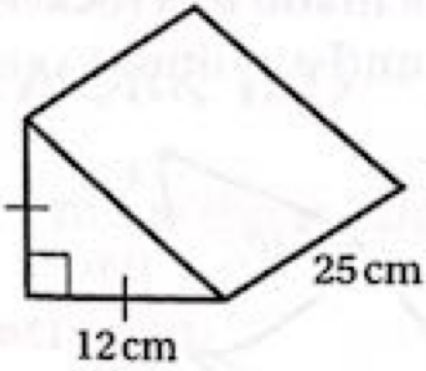

h

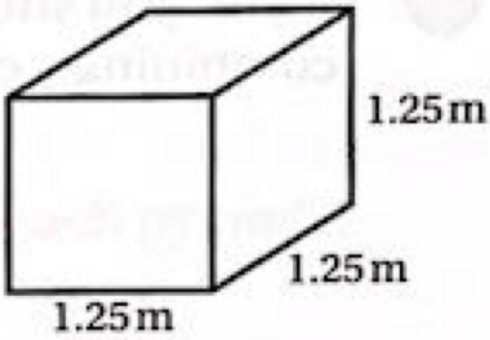

Classwork

a

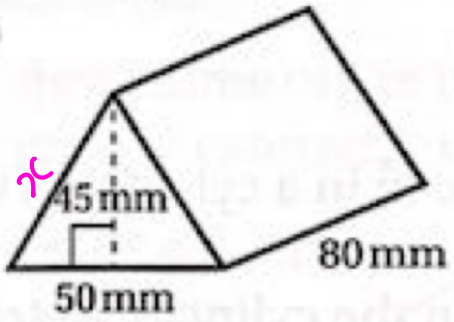

Area of cross-section

$= \frac{1}{2}$ base $\times$ height

$= \frac{1}{2} \times 50 \times 45$

$= 1125 \text{ mm}^2$

Vol = Area of cross-section $\times$ Length

$= 1125 \times 80$

$= 90{,}000 \text{ mm}^3$

$x^2 = 25^2 + 45^2 = 2650$

$x = \sqrt{2650} = 51.5 \text{ mm}$

Surface Area = 2 triangles + 3 rectangles

$= 1125 + 1125 + 50 \times 80 + 51.5 \times 80 + 51.5 \times 80$

$= 14490 \text{ mm}^2$

$= 14500 \text{ mm}^2$ to 3 s.f.

---

b

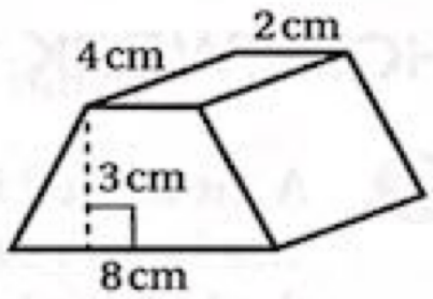

Area of trapezium cross-section

$= \frac{1}{2}(8+2) \times 3$

$= 15 \text{ cm}^2$

Volume of prism

$= 15 \times 4$

$= 60 \text{ cm}^3$

c

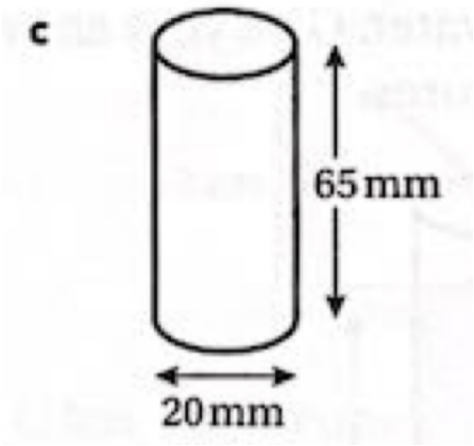

$r = 10\text{mm}$
$h = 65\text{mm}$

$$\text{Vol} = \pi r^2 h$$
$$= \pi \times 10^2 \times 65$$
$$= 6500\pi$$
$$= 20420 \text{ mm}^3$$
$$= 20400 \text{ mm}^3 \text{ to } 3 \text{ s.f.}$$

Surface area $= 2\pi r^2 + 2\pi r h$
$$= 2\pi \times 10^2 + 2\pi \times 10 \times 65$$
$$= 1500\pi$$
$$= 4712 \text{ mm}^2$$
$$= 4710 \text{ mm}^2 \text{ to } 3 \text{ s.f.}$$

---

d

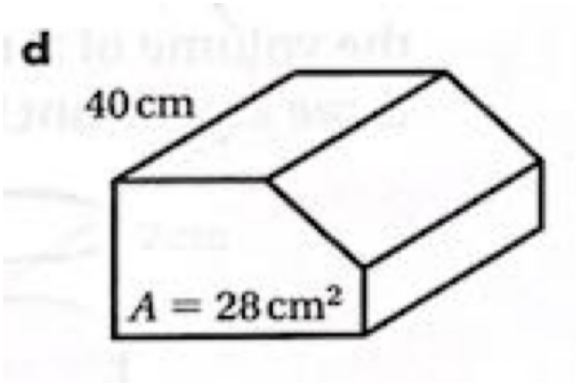

Volume = Area of cross-section × Length
$$= 28 \times 40$$
$$= 1120 \text{ cm}^3$$

---

e

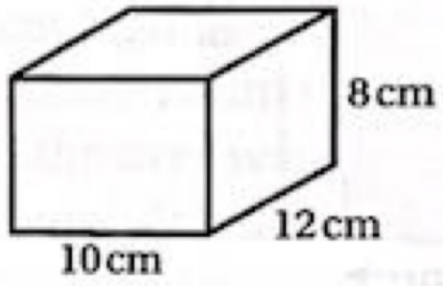

$\text{Vol} = 10 \times 12 \times 8 = 960 \text{ cm}^3$

Surface Area = 6 rectangles
$$= 2 \times 10 \times 8 + 2 \times 12 \times 8 + 2 \times 10 \times 12$$
$$= 592 \text{ cm}^2$$

f

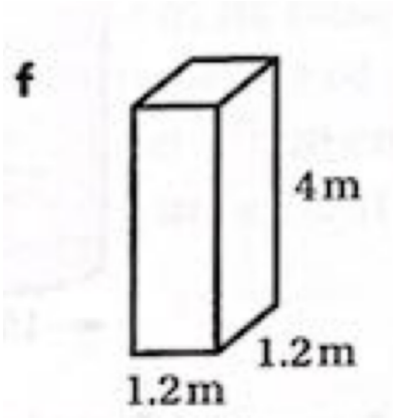

Vol $= 1.2 \times 1.2 \times 4 = 5.76\ m^3$

Surface Area = 6 rectangles

$2 \times 1.2 \times 1.2 + 2 \times 1.2 \times 4 + 2 \times 1.2 \times 4$

$= 22.08\ m^2$

$= 22.1\ m^2$ to 3 s.f.

---

g

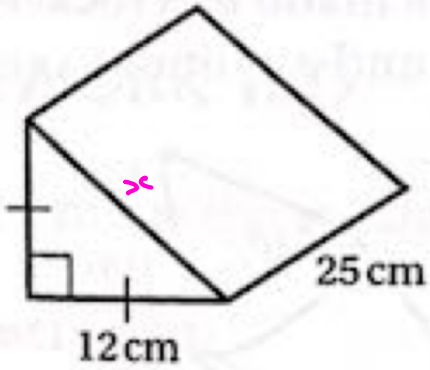

Area of Triangle

$= \frac{1}{2} \times 12 \times 12 = 72\ cm^2$

Volume $= 72 \times 25$

$= 1800\ cm^3$

$x^2 = 12^2 + 12^2 = 288$

$x = \sqrt{288} = 17.0\ cm$

Surface Area = 2 triangles + 3 rectangles

$= 72 + 72 + 17 \times 25 + 12 \times 25 + 12 \times 25$

$= 1169\ cm^2$

$= 1170\ cm^2$ to 3 s.f

---

h

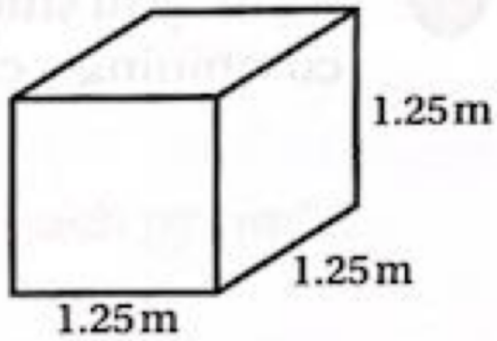

Cube

Vol $= 1.25 \times 1.25 \times 1.25$

$= 1.953 \text{ m}^3$

$= 1.95 \text{ m}^3$ to 3 s.f.

Surface Area = 6 squares

$= 6 \times 1.25 \times 1.25$

$= 9.375 \text{ m}^2$

$= 9.38 \text{ m}^2$